Around Dining Table

Barlow Tyrie Limited - www.teak.com

2ARO16.02 (White) / 2ARO16.14 (Forge Grey)
2ARO22.02 (White) / 2ARO22.14 (Forge Grey)

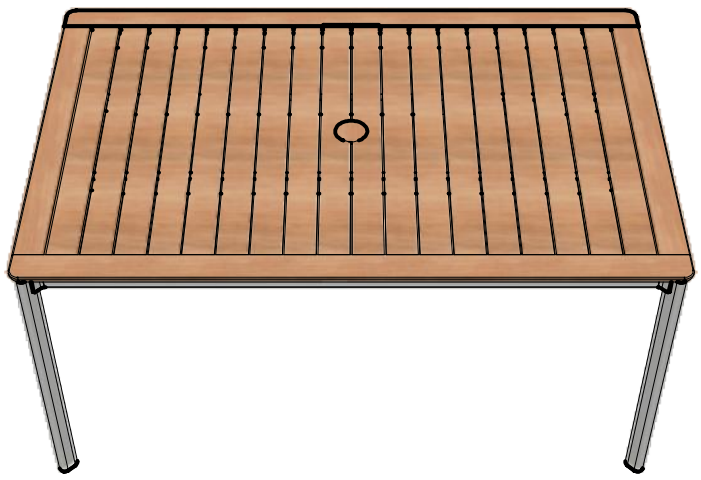

1

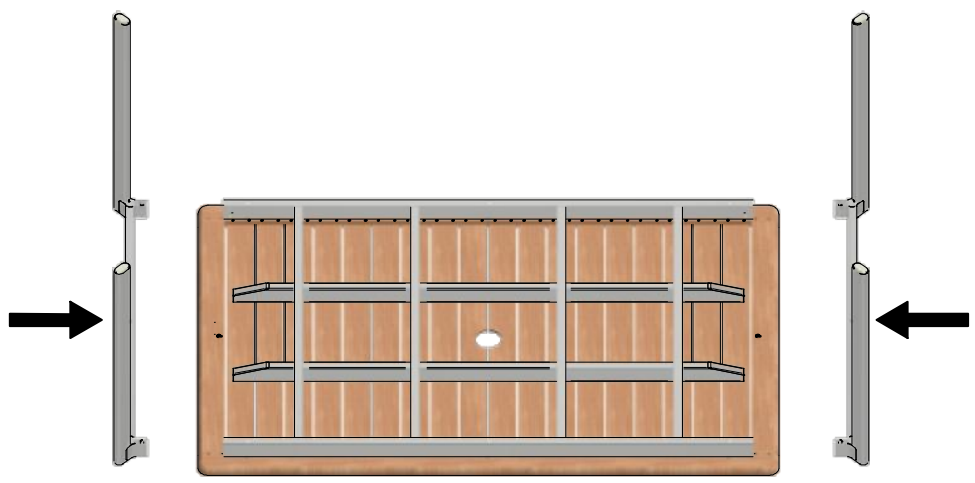

2

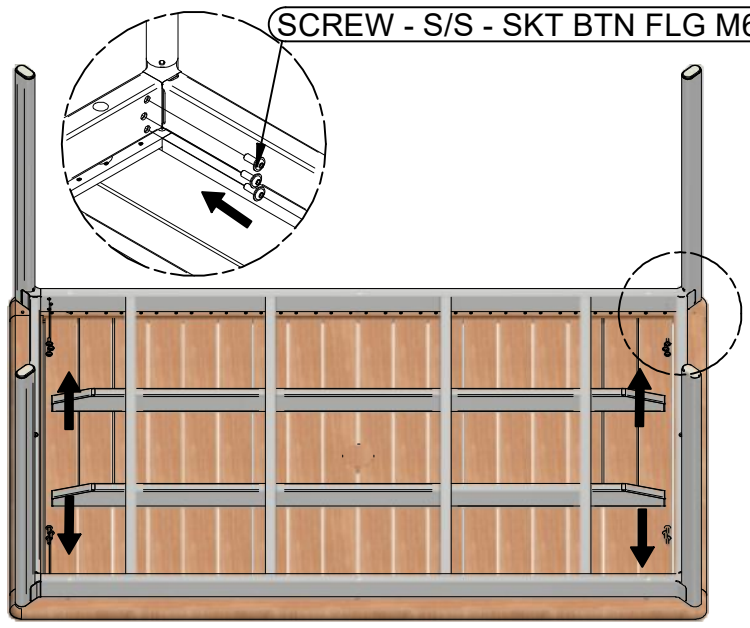

3

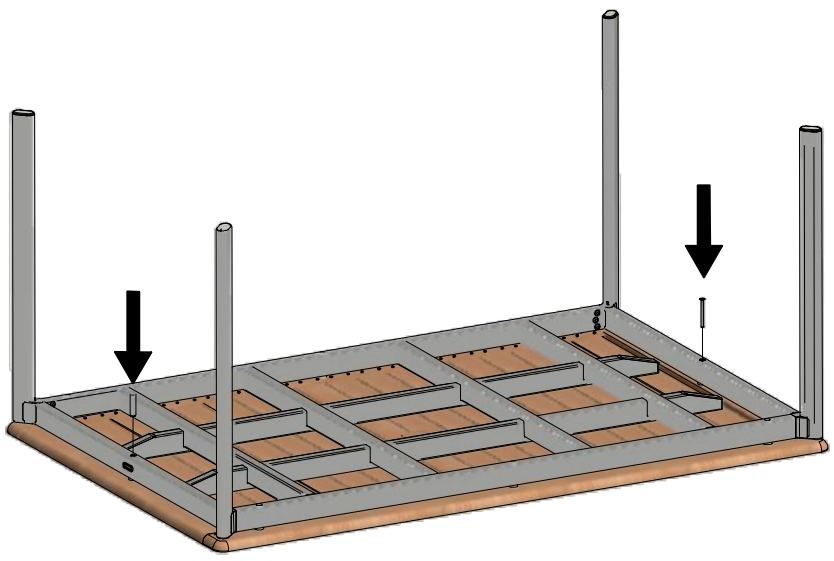

4

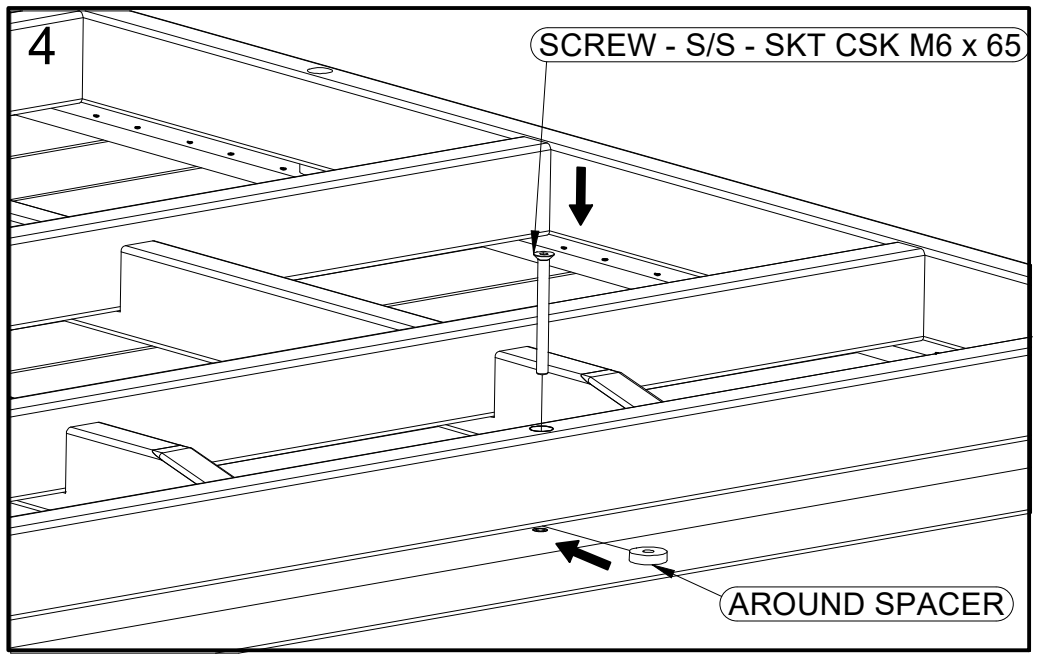
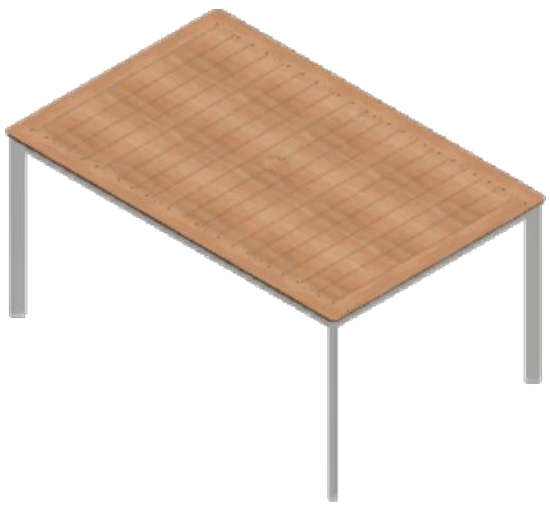
5